INDIAN TECHNOLOGICAL PRODUCTS PRIVATE LIMITED

yoi

Date: 04/14/2009

Customer:

Description:

Part No.: **YOI-49S-4.433619M-20-1-30**

Application:

Approved by:	Checked by :	Issued by :

Date: Apr 14, 2009

Part Number: -49S-4.433619M-20-1-30

1. **SCOPE.**

This specification shall cover the characteristics of the Quartz Crystal with XXX MHz

ELECTRICAL CHARACTERISTICS

Item		Requirement	Note
Holder Type		HC- 49S	
Nominal frequency	Fo	4.433619MHz	
Operation Mode	Mn	Fundamental, AT-Cut	
Operating temperature	To	-20~+70 ℃	
Store temperature	Ts	-55~+125 ℃	
Shunt capacitance	Co	7.0pF Max	
Freq. Tolerance	Δf/f	±30ppm	25℃
Freq. Vs temp.		±50ppm	-20~+70 ℃
Load capacitance	CL	20PF	
Motional resistance	Ω	150ΩMax	
Drive level	DL	1mW	
Insulation resistance	SR	500MΩ Min	(DC100±10V)
Aging	Δf_A	± 3 ppm/year	

■ MEASUREMENT

item	REQUIREMENT
Test instrument	It shall be measured by S&A 150D
Measurement	Standard condition: (1) Temperature 25 ±3℃(2) Relative humidity 60± 10% R.H
Condition	The measurement shall be in the temperature range of 5℃ to 35℃ and relative humidify range of 45% to 85% when there are no faults

This standard is defined in accordance with IEC1178-1: 1993.OC6800000 and GB/T12273-1996.

■ PHYSICAL CHARACTERISTICS

Test Item	Condition of test	Performance Requirements
Shock (Destructive)	Resonator shall be tested after 3 times random drops from the height of 20-70 cm onto hard wooden broad of thickness more than 30 mm.	No visible damage, and measured Values shall meet Table 1.
Vibration **(Destructive)**	Subject resonator to following vibration Frequency: 10-55Hz Amplitude: 0.75mm Cycle time: 1~2min(10-55-10Hz) Duration: 3 mutually perpendicular Planes in each 2 hours Direction: X, Y, Z	No visible damage, and measured values shall meet Table 1.
Terminal Strength **(Destructive)**	Pulling: body of resonator shall be fixed, and 1kg of tension weight shall be supplied gradually to axial direction of lead terminals for 30 seconds	,Frequency value shall meet Table1 and C.I<2Ω, The lead shall not be broken.
	Bending: body of resonator shall be fixed, And 90°Cbending at a distance of 2.5±0.5 mm from crystal main body shall be given being supplied 450g tension weight. after that, lead terminals shall be straightened gradually. Then, the same bending and straightening shall be supplied to the opposite direction in the same axial.	
Solder Heating **(Destructive)**	Each lead terminals shall be dipped into the solder melted tank at 350±10℃ for 3 ± 1 seconds to 2mm from the root of the resonator ,and at 260±10℃for 10 ± 1seconds by the same way.	No visible damage, and measured Values shall meet Table 1.

Solder DIP. **(Destructive)**	Dip the lead in liquid solder for 5 seconds, At 230±5℃ and 2.0mm from the root , after this dipping , 90% min of dipped parts shall be covered with solder.	No visible damage, and measured Values shall meet Table 1.
Leakage **(non-destructive)**	The resonator is to be soaked in the alcohol and enforced with the pressure of 25N/cm2 for 5 minutes Next , the resonator shall be tested after being taken out and dried with a dryer.	The Ir between the wire and the shell must be more than 500MΩ.

■ ENVIRONMENT ENDURANCE:

Test Item	Condition of test	Performance Requirements
Heat Resistance **(non-destructive)**	Subject resonator to 85±5℃ for 16 hours, then place the resonator in natural condition for 1 hour.	No visible damage, measured Values shall meet Table1.
Cold Resistance **(non-destructive)**	Subject resonator to -40±5℃ for 2 hours, then, place the resonator in natural condition for 1 hour.	No visible damage, measured Values shall meet Table 1.
Humidity	Keep the resonator at 40±2℃ and 90-95% R.H. for 96 hours. Then place it in natural condition for 1 hour.	The freq. meet $\lvert\Delta f\rvert \leq 5$ppm and C.I. ≤5Ω
Temperature shock	Temperature shaft from low to high, high to low For 3 times. And then put the resonator in natural Condition for 1 hour. 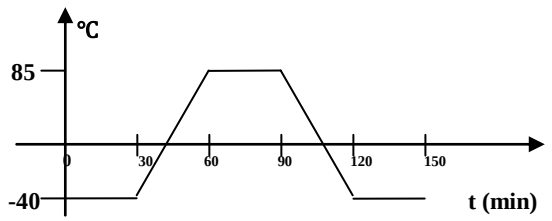	No visible damage, measured Values shall meet Table 1..

■ CHANGE OF CHARACTERISTICS

Table 1

Test Item	Specification	Note
Frequency change **($\lvert\Delta f/fo\rvert$)**	**No more than 10ppm**	
C.I. (R)	**No more than 15%**	**Reference to the initial value**

■ REVIEW OF SPECIFICATIONS

When something gets doubtful with these specifications, we shall jointly work to get an agreement.

■ DIMENTIONS: (UNIIT: mm)

FIG.1

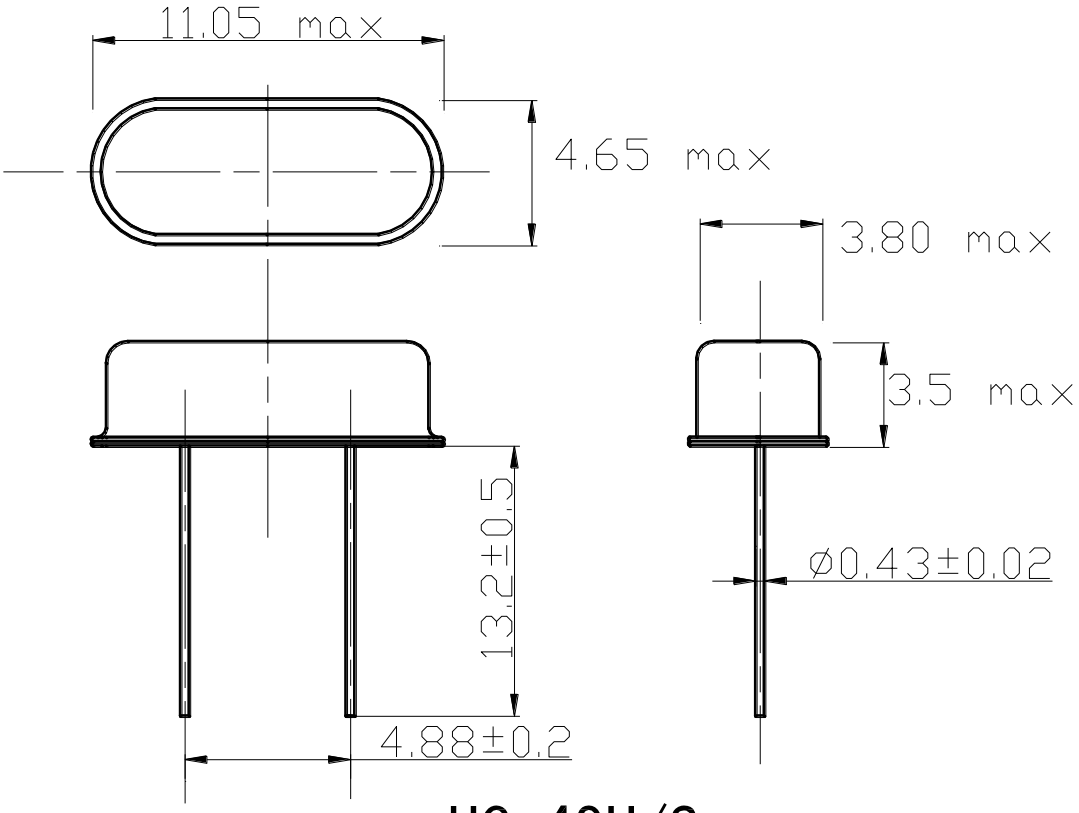

HC-49U/S

HC-49U/S
Height: 3.5mm Max